EAE
LIGHTING

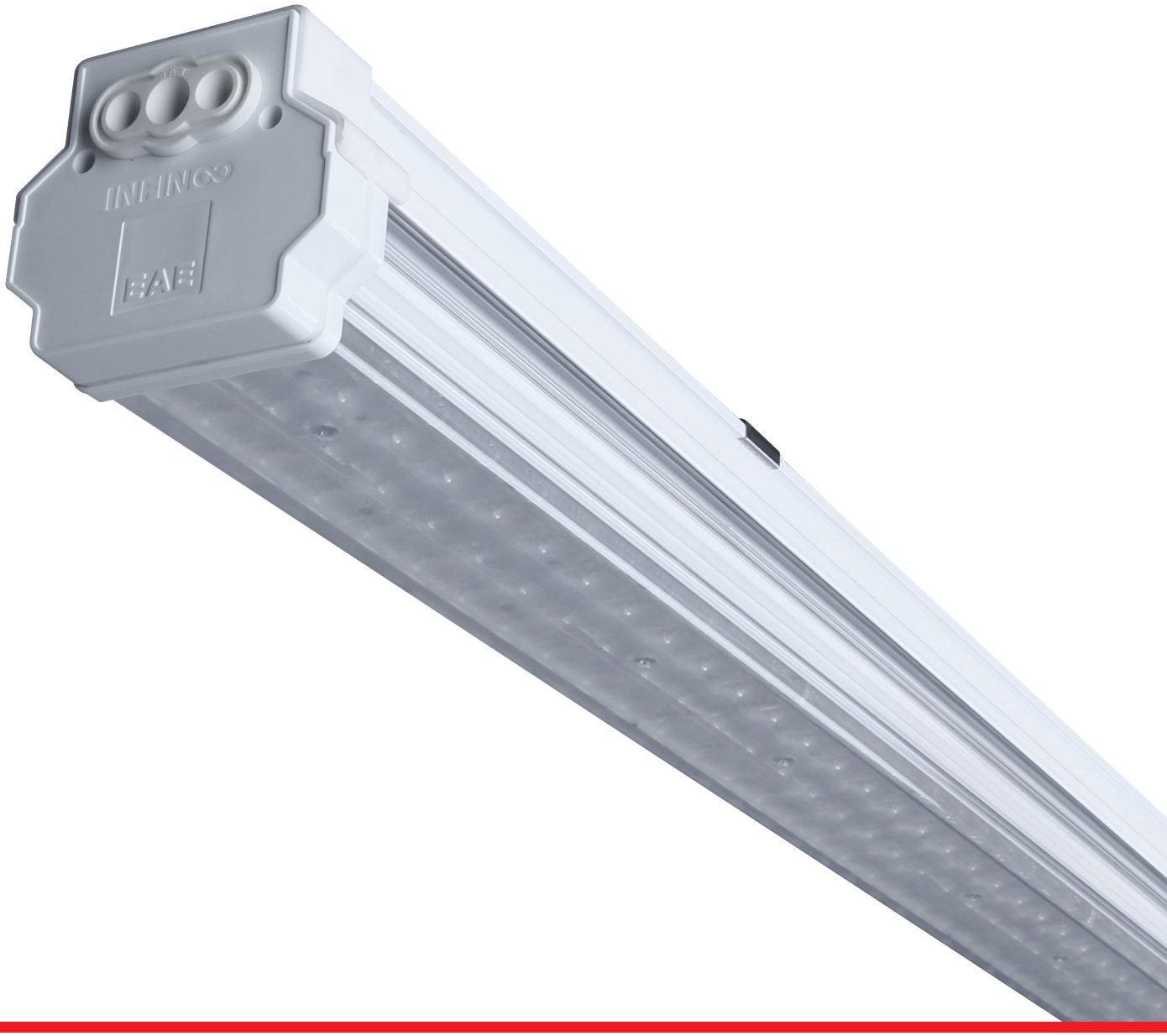

INFINO IP64

Linear Trunking System

INFINO

IP64

The Infino modular trunking system is now dust-proof and highly resistant to moisture!

INFINO IP64 MULTILENS

INFINO IP64 OPAL

INFINO IP64, WITH SPECIAL DESIGN SEALING SEAL, DUST-PROOF AND WATER RESISTANT, IS READY FOR SAFE USE IN ALL INDUSTRIAL FACILITIES.

The IP value that corresponds to the protection measure of an object against solid objects and liquids such as dust, sand and dirt is produced by considering the ambient conditions to be illuminated in the lighting fixtures. Industrial production facilities are the areas where the luminaires should have high IP protection in accordance with the environmental conditions. Modular light channel systems, on the other hand, are the product group in which high protection class can hardly be achieved due to its modular structure.

IP64 is surrounded by a leak-proof gasket that can provide the necessary protection from the header, body-cover linear junction and module junction points. It meets the lighting needs of all industrial facilities perfectly, thanks to its fast-easy assembly, wide optical angle options, and the creation of linear continuous or hopping LED lines.

INFINO IP64
SYSTEM OVERVIEW

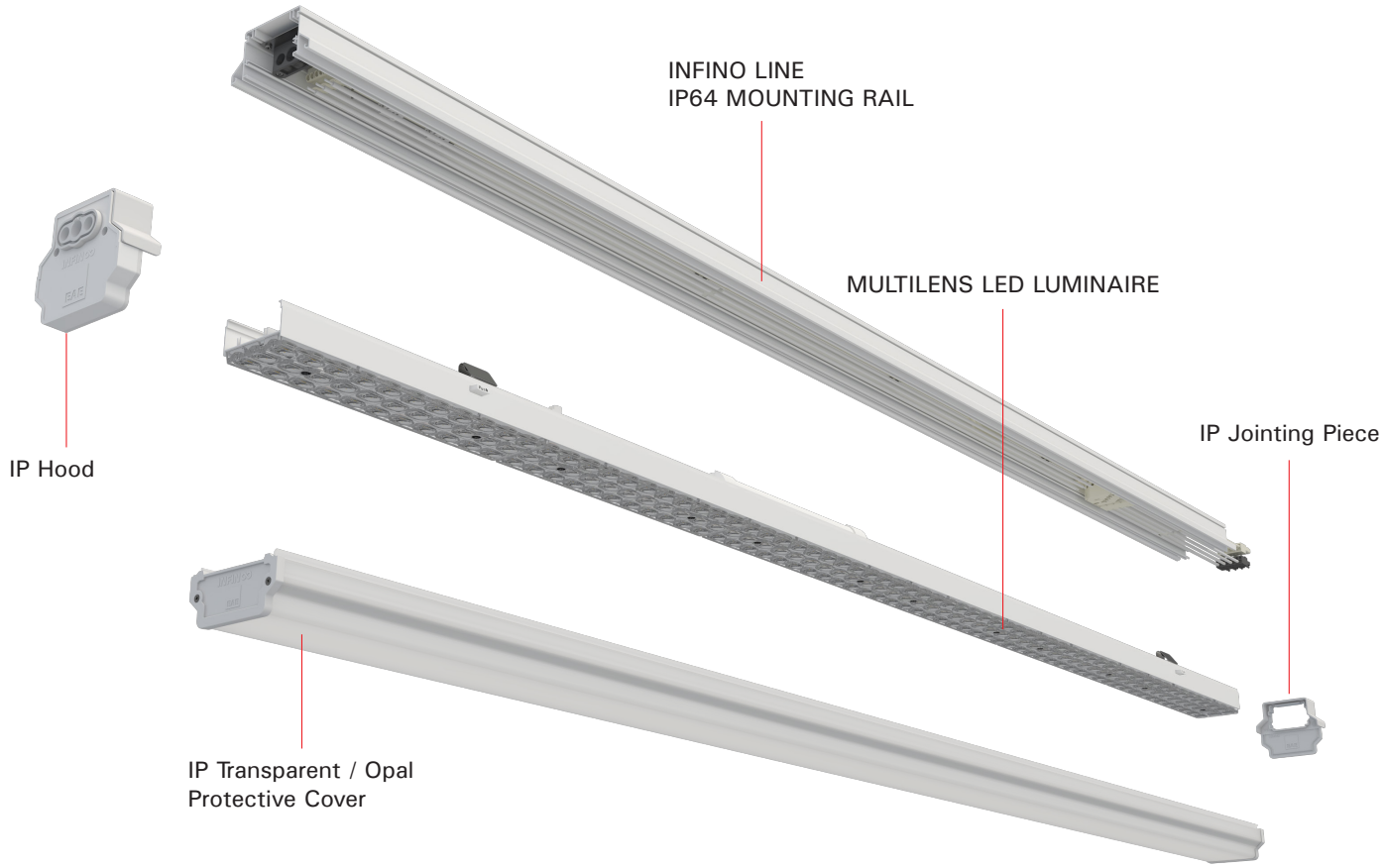

INFINO IP64 is protected with the help of specially designed gaskets at the headers and module junction points to provide IP protection from all sides. The aluminum mounting rail where the energy transmission is provided and the special sealed protective cover with opal or transparent cap options, wraps LED cap like a cover. Sealing is provided with elastic gasket at the joints. As a LED cap, INFINO MULTILENS armatures are used. Steel wire / chain / rod hanger set options are available.

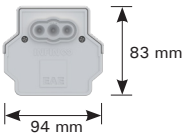

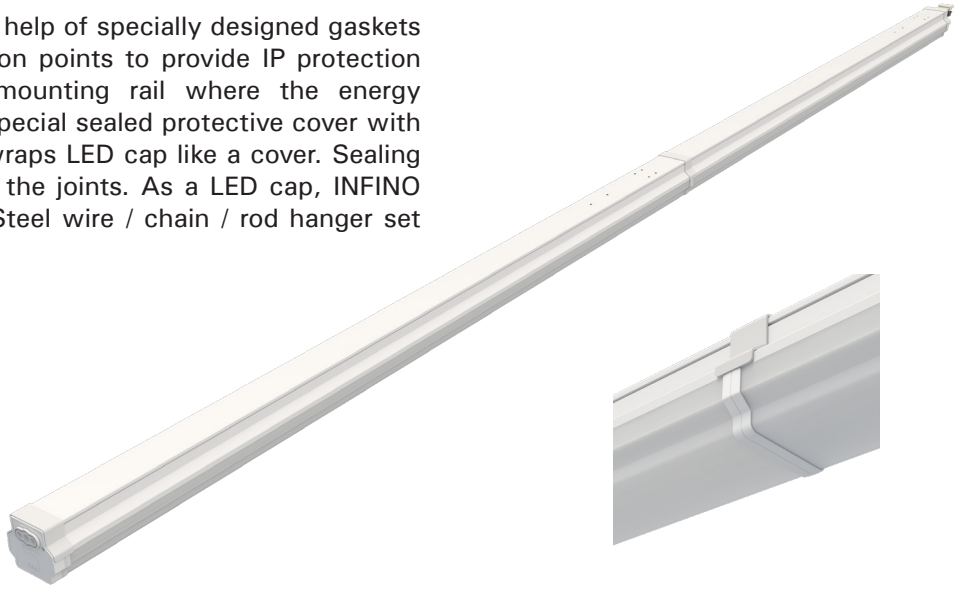

INFINO IP64 mounting rail and opal/transparent cap are ordered as a set. The requested LED armature is also ordered as modules with multi-lens or opal diffuser.

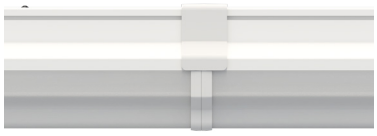

IP64 LINEAR TRUNKING ARRANGEMENT OPTIONS

1. LINEAR CONTINUOUS LIGHT LINE WITH MULTILENS LED LUMINAIRE
2. 1 FULL 1 EMPTY LINE WITH MULTILENS LED LUMINAIRE
3. LINEAR CONTINUOUS LIGHT LINE WITH OPAL LED LUMINAIRE
4. 1 FULL 1 EMPTY LINE WITH OPAL LED LUMINAIRE
5. 1 FULL 1 EMPTY LINE WITH OPAL LED LUMINAIRE AND OPAQUE COVER

OPTICAL OPTIONS

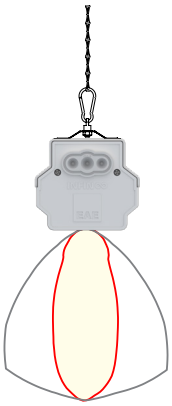

30° - 90°

It is a specially designed lighting fixture to provide efficient illumination for vertical facades of racks in areas such as warehouse areas. and logistics facilities with a ceiling height of 8-12 m.

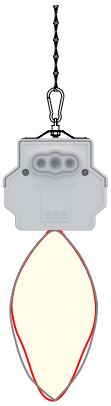

60°

In addition to warehouse and production areas with a maximum ceiling height of 8 m; it also offers an optimum solution for decorative areas. It provides advantages in lighting of environments such as shelf surfaces and aisle areas.

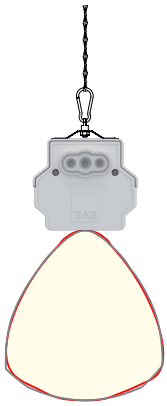

90°

It successfully meets commercially important lighting requirements in industrial plants ceiling height of 5m. It provides optimal illumination without creating discomfortable shadows throughout the entire length of the space.

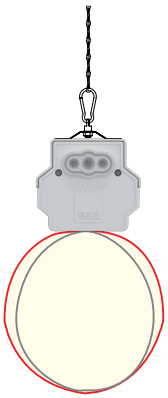

Opal (OD)

With its homogeneous lighting distribution perfectly meets general lighting requirements of low-bay applications.

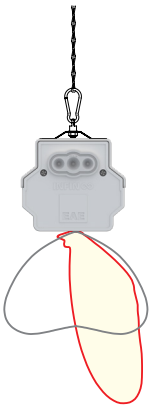

Asymmetric angle (AS)

In retail areas with a ceiling height of up to 5 m, it provides optimum performance in illumination of single-sided shelves and vertical surfaces where illumination is of high importance.

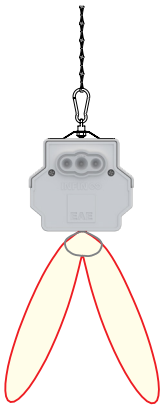

Double-asymmetric angle (DA)

It meets the commercial lighting requirements needed in the retail areas such as shops and general stores with a ceiling height of up to 5 m by providing optimum illumination for double-sided shelves and vertical surfaces.

EAE LIGHTING

INFINO LINE IP64
MOUNTING RAIL WITH TRANSPARENT COVER

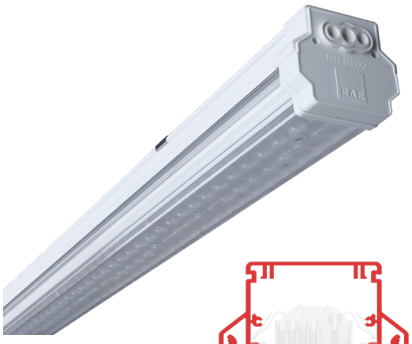

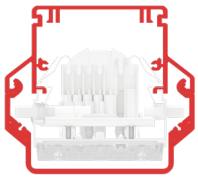

Infino IP64
Housing + Transparent Cover

Infino IP64 mounting rail is a set with transparent protective cover and mounting accessories. In order to complete the product, INFINO Multilens LED cover is selected according to the project requirement.

- Electrostatic powder coated aluminum mounting rail

Transparent protective cover with special gasket and jointing accessories

- 5 / 7 / 9 / 11 CONDUCTOR options

1445mm / 1731mm / 2878mm / 3451mm length options

- Internal feeding group inside BS casing
- BS-ARA-SN* casing options with current collection group

ARA body options without current collection group

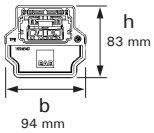

BS : Starter casing
ARA : Intermediate casing
SN : Termination casing
BOS ARA : Blind intermediate housing without tap-off units

Dimensions (mm)

BS HOUSING + TRANSPARENT COVER

	ORDER NO	DESCRIPTION	SIZE
5	3178092	INF BAS GVD SD I5 1463 TK - IP64	1463
	3178096	INF BAS GVD SD I5 1749 TK - IP64	1749
	3225957	INF BAS GVD SD I5 2896 TK - IP64	2896
	3225958	INF BAS GVD SD I5 3469 TK - IP64	3469
7	3178093	INF BAS GVD SD I7 1463 TK - IP64	1463
	3178097	INF BAS GVD SD I7 1749 TK - IP64	1749
	3178101	INF BAS GVD SD I7 2896 TK - IP64	2896
	3178105	INF BAS GVD SD I7 3469 TK - IP64	3469

INTERMEDIATE HOUSING + TRANSPARENT COVER

	ORDER NO	DESCRIPTION	SIZE
5	3178068	INF ARA GVD SD I5 1445 TK - IP64	1445
	3178072	INF ARA GVD SD I5 1731 TK - IP64	1731
	3178076	INF ARA GVD SD I5 2878 TK - IP64	2878
	3178080	INF ARA GVD SD I5 3451 TK - IP64	3451
7	3178069	INF ARA GVD SD I7 1445 TK - IP64	1445
	3178073	INF ARA GVD SD I7 1731 TK - IP64	1731
	3178077	INF ARA GVD SD I7 2878 TK - IP64	2878
	3178081	INF ARA GVD SD I7 3451 TK - IP64	3451

FINAL HOUSING + TRANSPARENT COVER

	ORDER NO	DESCRIPTION	SIZE
5	3178116	INF SON GVD SD I5 1463 TK - IP64	1463
	3178120	INF SON GVD SD I5 1749 TK - IP64	1749
	3178124	INF SON GVD SD I5 2896 TK - IP64	2896
	3178128	INF SON GVD SD I5 3469 TK - IP64	3469
7	3178117	INF SON GVD SD I7 1463 TK - IP64	1463
	3178121	INF SON GVD SD I7 1749 TK - IP64	1749
	3178125	INF SON GVD SD I7 2896 TK - IP64	2896
	3178129	INF SON GVD SD I7 3469 TK - IP64	3469

INTERMEDIATE HOUSING WITHOUT TAP-OFF UNITS + TRANSPARENT COVER

	SAP NO	DESCRIPTION	SIZE
5	3225568	INF BOS ARA GVD SD I5 1445 TK - IP64	1445
	3225569	INF BOS ARA GVD SD I5 1731 TK - IP64	1731
	3225571	INF BOS ARA GVD SD I5 2878 TK - IP64	2878
	3225570	INF BOS ARA GVD SD I5 3451 TK - IP64	3451
7	3225572	INF BOS ARA GVD SD I7 1445 TK - IP64	1445
	3225573	INF BOS ARA GVD SD I7 1731 TK - IP64	1731
	3225575	INF BOS ARA GVD SD I7 2878 TK - IP64	2878
	3225574	INF BOS ARA GVD SD I7 3451 TK - IP64	3451

Dimensions (mm)

BS HOUSING + TRANSPARENT COVER

	ORDER NO	DESCRIPTION	SIZE
9	3178094	INF BAS GVD SD I9 1463 TK - IP64	1463
	3178098	INF BAS GVD SD I9 1749 TK - IP64	1749
	3178102	INF BAS GVD SD I9 2896 TK - IP64	2896
	3178106	INF BAS GVD SD I9 3469 TK - IP64	3469
11	3178095	INF BAS GVD SD I11 1463 TK - IP64	1463
	3178099	INF BAS GVD SD I11 1749 TK - IP64	1749
	3178103	INF BAS GVD SD I11 2896 TK - IP64	2896
	3178107	INF BAS GVD SD I11 3469 TK - IP64	3469

INTERMEDIATE HOUSING + TRANSPARENT COVER

	ORDER NO	DESCRIPTION	SIZE
9	3178070	INF ARA GVD SD I9 1445 TK - IP64	1445
	3178074	INF ARA GVD SD I9 1731 TK - IP64	1731
	3178078	INF ARA GVD SD I9 2878 TK - IP64	2878
	3178082	INF ARA GVD SD I9 3451 TK - IP64	3451
11	3178071	INF ARA GVD SD I11 1445 TK - IP64	1445
	3178075	INF ARA GVD SD I11 1731 TK - IP64	1731
	3178079	INF ARA GVD SD I11 2878 TK - IP64	2878
	3178083	INF ARA GVD SD I11 3451 TK - IP64	3451

FINAL HOUSING + TRANSPARENT COVER

	ORDER NO	DESCRIPTION	SIZE
9	3178118	INF SON GVD SD I9 1463 TK - IP64	1463
	3178122	INF SON GVD SD I9 1749 TK - IP64	1749
	3178126	INF SON GVD SD I9 2896 TK - IP64	2896
	3178130	INF SON GVD SD I9 3469 TK - IP64	3469
11	3178119	INF SON GVD SD I11 1463 TK - IP64	1463
	3178123	INF SON GVD SD I11 1749 TK - IP64	1749
	3178127	INF SON GVD SD I11 2896 TK - IP64	2896
	3178131	INF SON GVD SD I11 3469 TK - IP64	3469

INTERMEDIATE HOUSING WITHOUT TAP-OFF UNITS + TRANSPARENT COVER

	SAP NO	DESCRIPTION	SIZE
9	3225576	INF BOS ARA GVD SD I9 1445 TK - IP64	1445
	3225577	INF BOS ARA GVD SD I9 1731 TK - IP64	1731
	3225579	INF BOS ARA GVD SD I9 2878 TK - IP64	2878
	3225578	INF BOS ARA GVD SD I9 3451 TK - IP64	3451
11	3225580	INF BOS ARA GVD SD I11 1445 TK - IP64	1445
	3225581	INF BOS ARA GVD SD I11 1731 TK - IP64	1731
	3225583	INF BOS ARA GVD SD I11 2878 TK - IP64	2878
	3225582	INF BOS ARA GVD SD I11 3451 TK - IP64	3451

INFINO LINE IP64
LED LUMINAIRE WITH MULTILENS OPTIC

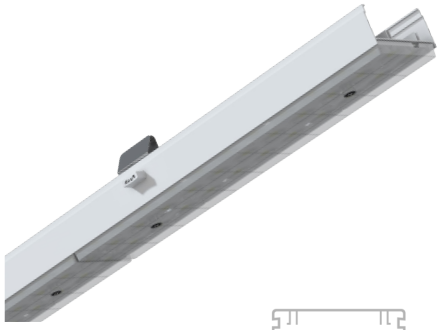

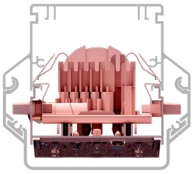

Infino IP64
LED luminaire with multilens optic

Infino has 2 different lenght (1433mm ve 1720mm) and 5 different optic choices (30°-90°/ 60°/ 90°/asymmetric/double asymmetric)

- One-row LED luminaire with multilens optic comply with INFINO LINE housing
- 1433 mm / 1720 mm lenght options
- 5000 lm-12000 lm wide range of optic choices
- 30°-90° / 60° / 90° / Asymmetric / Double Asymmetric optic choices
- Product efficacy up to 155lm/W
- 1433 mm / 1720 mm length options
- Ra>80 colour rendering index (Ra>90 optional)
- LED service life >72000h (L70)
- 3000K / 4000K / 5700K / 6500K colour temperature options
- ON-OFF / DALI / EMK / DALI+DALI EMK control options

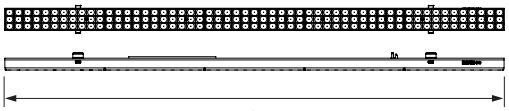

Dimensions (mm)

1433mm LUMINAIRE

ORDER NO	DESCRIPTION	SIZE
3156900	INF 036U 40LN00 5K00 3090 143	1433
3141489	INF 036U 40LN00 5K00 60 143	1433
3157020	INF 036U 40LN00 5K00 90 143	1433
3157140	INF 036U 40LN00 5K00 AS 143	1433
3164465	INF 036U 40LN00 5K00 DA 143	1433
3156918	INF 064U 40LN00 9K50 3090 143	1433
3141507	INF 064U 40LN00 9K50 60 143	1433
3157038	INF 064U 40LN00 9K50 90 143	1433
3157158	INF 064U 40LN00 9K50 AS 143	1433
3157278	INF 064U 40LN00 9K50 DA 143	1433

1720mm LUMINAIRE

ORDER NO	DESCRIPTION	SIZE
3156930	INF 035U 40LN00 5K20 3090 172	1720
3141519	INF 035U 40LN00 5K19 60 172	1720
3157050	INF 035U 40LN00 5K20 90 172	1720
3157170	INF 035U 40LN00 5K20 AS 172	1720
3157290	INF 035U 40LN00 5K20 DA 172	1720
3156948	INF 065U 40LN00 9K92 3090 172	1720
3141537	INF 065U 40LN00 9K92 60 172	1720
3157068	INF 065U 40LN00 9K92 90 172	1720
3157188	INF 065U 40LN00 9K92 AS 172	1720
3157308	INF 065U 40LN00 9K92 DA 172	1720

Only 5000 lm and 10000 lm product codes have been provided. Please visit our website for other options.

INFINO IP64
ALUMINIUM OR PC COVER

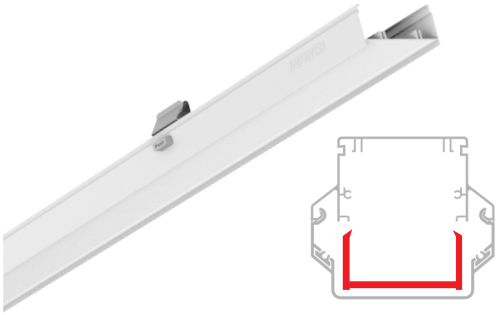

Infino linear trunking system can be applied skip-sequentally with the help of blind covers. In addition to metal cover which could be installed via push-button, there is also PC blind cover option with spring mechanism. Infino has wide range of lenght options for metal cover, (1000mm-2000mm) and PC cover (1000mm-5152mm)

HOUSING STRUCTURE	EQUIPMENT TO BE INSTALLED	
	LUMINAIRE	COVER
HEAD HOUSING	✓	✓
INTERMEDIATE HOUSING	✓	✓
FINAL HOUSING	✓	✓
BLIND INTERMEDIATE HOUSING WITHOUT TAP-OFF UNITS	X	✓

Dimensions (mm)

BLIND PLASTIC COVER

ORDER NO	DESCRIPTION	SIZE
2074772	INF BOS PLSTK KAPAK PRF - 1433	1433
2079010	INF BOS PLSTK KAPAK PRF - 2865	2865
2074773	INF BOS PLSTK KAPAK PRF - 1720	1720
2079011	INF BOS PLSTK KAPAK PRF - 3435	3435

Dimensions (mm)

BLIND METAL COVER

ORDER NO	DESCRIPTION	SIZE
3159895	INF BOS METAL KAPAK 1433 TK	1433
3159896	INF BOS METAL KAPAK 1720 TK	1720

EAE LIGHTING

INFINO LINE IP64
OPAL COVER HOUSING

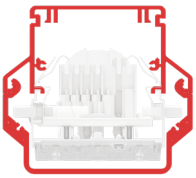

Infino IP64
Housing + Opal Cover

Infino IP64 mounting rail is a set with opal protective cover and mounting accessories. In order to complete the product, INFINO IP64 Opal LED cover is selected according to the project requirement.

- Electrostatic powder coated aluminum mounting rail

Special sealed opal protective cover and jointing accessories

- 5 / 7 / 9 / 11 CONDUCTOR options

1445mm / 1731mm / 2878mm / 3451mm height options

- internal feeding group inside BS casing
- BS-ARA-SN casing options with current collection group

ARA body options without current collection group

BS : Starter casing
ARA : Intermediate casing
SN : Termination casing

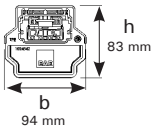

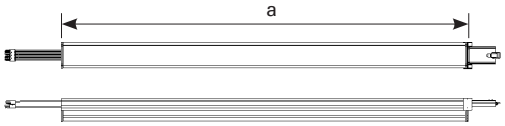

Dimensions (mm)

BS HOUSING + OPAL COVER

	ORDER NO	DESCRIPTION	SIZE
5	3194007	INF BAS GVD OD I5 1463 TK - IP64	1463
	3194011	INF BAS GVD OD I5 1749 TK - IP64	1749
	3225808	INF BAS GVD OD I5 2896 TK - IP64	2896
	3225809	INF BAS GVD OD I5 3469 TK - IP64	3469
7	3194008	INF BAS GVD OD I7 1463 TK - IP64	1463
	3194012	INF BAS GVD OD I7 1749 TK - IP64	1749
	3178100	INF BAS GVD OD I7 2896 TK - IP64	2896
	3194020	INF BAS GVD OD I7 3469 TK - IP64	3469

Dimensions (mm)

BS HOUSING + OPAL COVER

	ORDER NO	DESCRIPTION	SIZE
9	3194009	INF BAS GVD OD I9 1463 TK - IP64	1463
	3194013	INF BAS GVD OD I9 1749 TK - IP64	1749
	3194017	INF BAS GVD OD I9 2896 TK - IP64	2896
	3194021	INF BAS GVD OD I9 3469 TK - IP64	3469
11	3194010	INF BAS GVD OD I11 1463 TK - IP64	1463
	3194014	INF BAS GVD OD I11 1749 TK - IP64	1749
	3194018	INF BAS GVD OD I11 2896 TK - IP64	2896
	3194022	INF BAS GVD OD I11 3469 TK - IP64	3469

INTERMEDIATE HOUSING + OPAL COVER

	ORDER NO	DESCRIPTION	SIZE
5	3193975	INF ARA GVD OD I5 1445 TK - IP64	1445
	3193979	INF ARA GVD OD I5 1731 TK - IP64	1731
	3193983	INF ARA GVD OD I5 2878 TK - IP64	2878
	3193987	INF ARA GVD OD I5 3451 TK - IP64	3451
7	3193976	INF ARA GVD OD I7 1445 TK - IP64	1445
	3193980	INF ARA GVD OD I7 1731 TK - IP64	1731
	3193984	INF ARA GVD OD I7 2878 TK - IP64	2878
	3193988	INF ARA GVD OD I7 3451 TK - IP64	3451

INTERMEDIATE HOUSING + OPAL COVER

	ORDER NO	DESCRIPTION	SIZE
9	3193977	INF ARA GVD OD I9 1445 TK - IP64	1445
	3193981	INF ARA GVD OD I9 1731 TK - IP64	1731
	3193985	INF ARA GVD OD I9 2878 TK - IP64	2878
	3193989	INF ARA GVD OD I9 3451 TK - IP64	3451
11	3193978	INF ARA GVD OD I11 1445 TK - IP64	1445
	3193982	INF ARA GVD OD I11 1731 TK - IP64	1731
	3193986	INF ARA GVD OD I11 2878 TK - IP64	2878
	3193990	INF ARA GVD OD I11 3451 TK - IP64	3451

FINAL HOUSING + OPAL COVER

	ORDER NO	DESCRIPTION	SIZE
5	3194023	INF SON GVD OD I5 1463 TK - IP64	1463
	3194027	INF SON GVD OD I5 1749 TK - IP64	1749
	3225810	INF SON GVD OD I5 2896 TK - IP64	2896
	3225811	INF SON GVD OD I5 3469 TK - IP64	3469
7	3194024	INF SON GVD OD I7 1463 TK - IP64	1463
	3194028	INF SON GVD OD I7 1749 TK - IP64	1749
	3194032	INF SON GVD OD I7 2896 TK - IP64	2896
	3194035	INF SON GVD OD I7 3469 TK - IP64	3469

FINAL HOUSING + OPAL COVER

	ORDER NO	DESCRIPTION	SIZE
9	3194025	INF SON GVD OD I9 1463 TK - IP64	1463
	3194029	INF SON GVD OD I9 1749 TK - IP64	1749
	3194033	INF SON GVD OD I9 2896 TK - IP64	2896
	3194037	INF SON GVD OD I9 3469 TK - IP64	3469
11	3194026	INF SON GVD OD I11 1463 TK - IP64	1463
	3194030	INF SON GVD OD I11 1749 TK - IP64	1749
	3194034	INF SON GVD OD I11 2896 TK - IP64	2896
	3194038	INF SON GVD OD I11 3469 TK - IP64	3469

INFINO IP64 OPAL
LED LUMINAIRE SUITABLE FOR USE WITH OPAL DIFFUSOR

As a LED cap with opal diffuser that can be mounted to INFINO IP64 body profile without any tool, it has two lengths of 1433mm and 1720mm with homogeneous light distribution and 2600/3200/5200/5600 lumen package options.

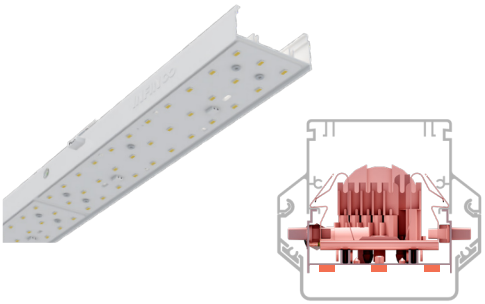

Infino IP64
Opal LED Luminaire

- LED luminaire suitable for use with a single-line opal diffuser suitable for INFINO IP64 body profile
- 1433 mm / 1720 mm size options
- 2600lm ~ 5600lm broad lumen package range
- Homogenous light distribution
- Ra>80 color rendering index (Ra>90 optional)
- 3000K / 4000K / 5700K / 6500K color temperature options

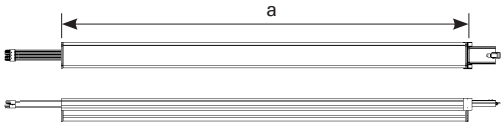

Dimensions (mm)

1433mm LUMINAIRE

ORDER NO	DESCRIPTION	SIZE
3193916	INF 028U 40OD00 3K20 143 64	1433
3193928	INF 050U 40OD00 5K60 143 64	1433

1720mm LUMINAIRE

ORDER NO	DESCRIPTION	SIZE
3193940	INF 025U 40OD00 2K80 172 64	1720
3193952	INF 050U 40OD00 5K70 172 64	1720

INFINO LINE IP64
BLIND MOUNTING RAIL WITH OPAL / OPAQUE COVER

Opal (OD)

Opak (OP)

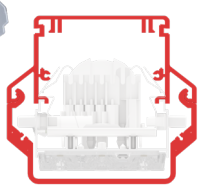

Infiinoo linear trunking system can be applied skip-sequentally with the help of blind covers. In addition to metal cover which could be installed via push-button, there is also PC blind cover option with spring mechanism. Infino has wide range of lenght options for metal cover, (1000mm-2000mm) and PC cover (1000mm-5152mm)

HOUSING STRUCTURE	EQUIPMENT TO BE INSTALLED	
	LUMINAIRE	COVER
HEAD HOUSING	✔	✔
INTERMEDIATE HOUSING	✔	✔
FINAL HOUSING	✔	✔
BLIND INTERMEDIATE HOUSING WITHOUT TAP-OFF UNITS	X	✔

Dimensions (mm)

BLIND INTERMEDIATE HOUSING WITHOUT TAP-OFF UNITS WITH OPAL COVER

		DESCRIPTION	SIZE
5	3193489	INF BOS ARA GVD OD I5 1445 TK - IP64	1445
	3193493	INF BOS ARA GVD OD I5 1731 TK - IP64	1731
	3193500	INF BOS ARA GVD OD I5 2878 TK - IP64	2878
	3193504	INF BOS ARA GVD OD I5 3451 TK - IP64	3451
7	3193490	INF BOS ARA GVD OD I7 1445 TK - IP64	1445
	3193494	INF BOS ARA GVD OD I7 1731 TK - IP64	1731
	3193501	INF BOS ARA GVD OD I7 2878 TK - IP64	2878
	3193505	INF BOS ARA GVD OD I7 3451 TK - IP64	3451
9	3193491	INF BOS ARA GVD OD I9 1445 TK - IP64	1445
	3193495	INF BOS ARA GVD OD I9 1731 TK - IP64	1731
	3193502	INF BOS ARA GVD OD I9 2878 TK - IP64	2878
	3193506	INF BOS ARA GVD OD I9 3451 TK - IP64	3451
11	3193492	INF BOS ARA GVD OD I11 1445 TK - IP64	1445
	3193499	INF BOS ARA GVD OD I11 1731 TK - IP64	1731
	3193503	INF BOS ARA GVD OD I11 2878 TK - IP64	2878
	3193507	INF BOS ARA GVD OD I11 3451 TK - IP64	3451

Dimensions (mm)

BLIND INTERMEDIATE HOUSING WITHOUT TAP-OFF UNITS WITH NON-TRANSPARENT (OP) COVER

		DESCRIPTION	SIZE
5	3225553	INF BOS ARA GVD OP I5 1445 TK - IP64	1445
	3225554	INF BOS ARA GVD OP I5 1731 TK - IP64	1731
	3225555	INF BOS ARA GVD OP I5 2878 TK - IP64	2878
	3225556	INF BOS ARA GVD OP I5 3451 TK - IP64	3451
7	3225557	INF BOS ARA GVD OP I7 1445 TK - IP64	1445
	3225558	INF BOS ARA GVD OP I7 1731 TK - IP64	1731
	3225559	INF BOS ARA GVD OP I7 2878 TK - IP64	2878
	3225560	INF BOS ARA GVD OP I7 3451 TK - IP64	3451
9	3225561	INF BOS ARA GVD OP I9 1445 TK - IP64	1445
	3225562	INF BOS ARA GVD OP I9 1731 TK - IP64	1731
	3225563	INF BOS ARA GVD OP I9 2878 TK - IP64	2878
	3225564	INF BOS ARA GVD OP I9 3451 TK - IP64	3451
11	3225549	INF BOS ARA GVD OP I11 1445 TK - IP64	1445
	3225550	INF BOS ARA GVD OP I11 1731 TK - IP64	1731
	3225551	INF BOS ARA GVD OP I11 2878 TK - IP64	2878
	3225552	INF BOS ARA GVD OP I11 3451 TK - IP64	3451

SUSPENSION SETS

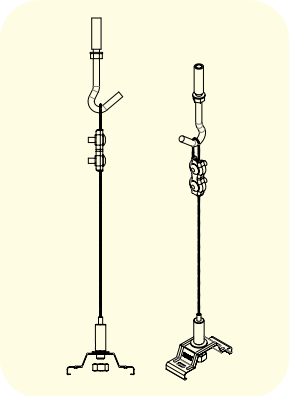

STEEL FIBRE-REINFORCED CONCRETE SUSPENSION SET

INF CELIK TEL-BETON ASKI TAKIMI 1M 3156584
INF CELIK TEL-BETON ASKI TAKIMI 1.5M 3207494
INF CELIK TEL-BETON ASKI TAKIMI 2M 3156880
INF CELIK TEL-BETON ASKI TAKIMI 3M 3156887
INF CELIK TEL-BETON ASKI TAKIMI 5M 3177347
INF CELIK TEL-BETON ASKI TAKIMI 6M 3178926

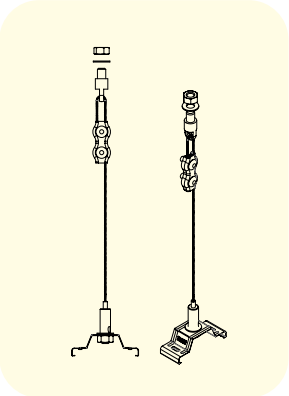

STEEL FIBRE-CABLE TRAY SUSPENSION SET

INF CELIK TEL-KABLO K. ASKI TAKIM 1M 3156585
INF CELIK TEL-KABLO K. ASKI TAKIM 2M 3156881
INF CELIK TEL-KABLO K. ASKI TAKIM 3M 3156888

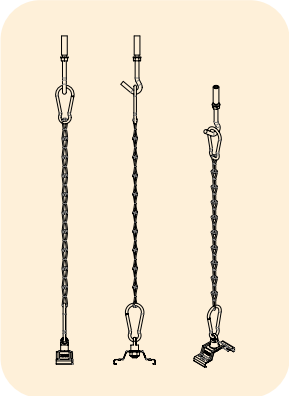

CHAIN CONCRETE SUSPENSION SET

INF ZINCIR-BETON ASKI TAKIM 1M 3156586
INF ZINCIR-BETON ASKI TAKIM 2M 3156882
INF ZINCIR-BETON ASKI TAKIM 3M 3156889

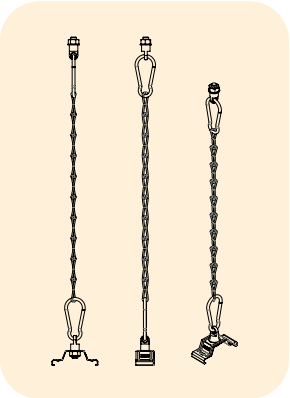

CHAIN CONCRETE CABLE TRAY SUSPENSION SET

INF ZINCIR-KABLO T. ASKI TAKIM 1M 3156587
INF ZINCIR-KABLO T. ASKI TAKIM 2M 3156883
INF ZINCIR-KABLO T. ASKI TAKIM 3M 3156890

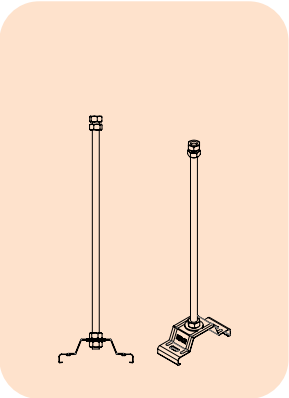

ROD-WIRE CABLE TRAY SUSPENSION SET

INF 2'LI TIJ-KABLO K. ASKI TAKIMI 1M 3156581
INF 2'LI TIJ-KABLO K. ASKI TAKIMI 2M 3156879
INF 2'LI TIJ-KABLO K. ASKI TAKIMI 3M 3156886

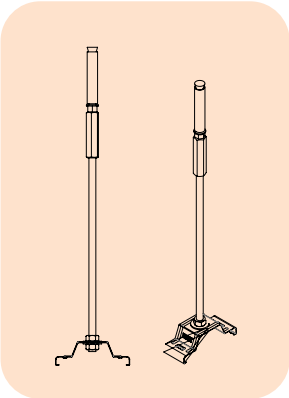

ROD-CONCRETE SUSPENSION SET

INF TIJ-BETON ASKI TAKIMI 1 M 3156580
INF TIJ-BETON ASKI TAKIMI 2 M 3156877
INF TIJ-BETON ASKI TAKIMI 3 M 3156885

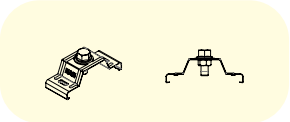

SUPPORT SPRING CABLE TRAY INSTALLATION TOOL

INFINO ASKI YAYI 1023044
INF ASKI YAYI - KABLO TAVASI ASKI TK 3156892

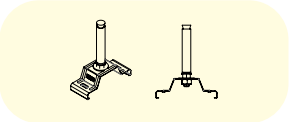

SUPPORT SPRING CONCRETE INSTALLATION TOOL

INF ASKI YAYI - BETON ASKI TK 3156891

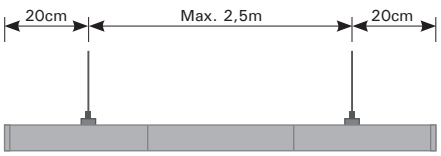

The distance from the support set to the starting point of the profile shall be minimum 20 cm.

INFINO IP64

Linear Trunking System

EAE LIGHTING-Brochure INFINO IP64 - ENG - Uptade Date: 03.05.2021
EAE, is provided with the right to perform changes deemed necessary without notifying in advance.
Please contact us for further information about products and details partaking in catalogue.

EAE LIGHTING Inc.
Ikitelli Organize Sanayi Bolgesi
Eski Turgut Ozal Caddesi No:20
Basaksehir / ISTANBUL - TURKEY
Tel : +90 212 413 21 00 (pbx)
Fax : +90 212 549 37 90
www.eaelighting.com

Available on the App Store
ANDROID APP ON Google Play

/eaegroup /eaegroup /eaegroup /eaecorporate /eaegroup /eaegroup

engineering the light