HBL IP65 LOWBAY

Surface Mounted 164 W LED High Bay Luminaire

Order Code	: 3268176
Product Code	: HBL 182U 40OA00 90 27K2 IP65

Product Data

Standard Features

Housing	: SW 306G painted aluminium injection housing
Optic	: Lens 90°
Diffuser	: PMMA/PC
IP Grade	: IP65
Installation	: Surface mounted / Pendant
Light Source	: Mid Power LED

Photometric Curve

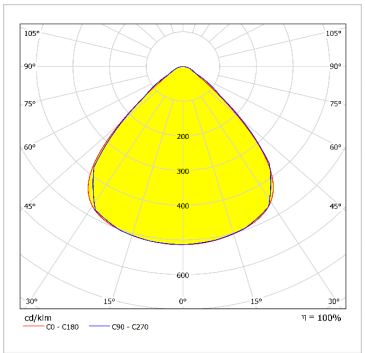

Optical & Electrical Features

Power Consumption	: 182 W
Final Luminous Flux	: 27238 lm
Efficacy	: 150 lm/W
Input Voltage	: 220-240 V AC
Frequency	: 50-60 Hz
Power Factor	: > 0,9
Surge Transient Protection	: 4 kV
Drive Current	: 875 mA
Correlated Color Temperature	: 4000K
Color Rendering Index	: >80
Photo-biologic Risk Group	: RG1

* There is ± 10% tolerance in Technical Values.

Other Features & Conditions

Operating Temperature Range	: -30 °C/+45°C
Impact Resistance	: IK10
Led Life Time - L70	: > 72.000 hours @ Ta=45 °C

Optional Features

Correlated Color Temperatures	: 3000K, 5000K, 5700K,6500K
Emergency Kit Options	: 1, 3 hours
DALI Option	: Yes
Optic Pain Option	: 55°

HBL IP65 LOWBAY

Surface Mounted 182 W LED High Bay Luminaire

3268176 HBL 182U 40OA00 90 27K2 IP65

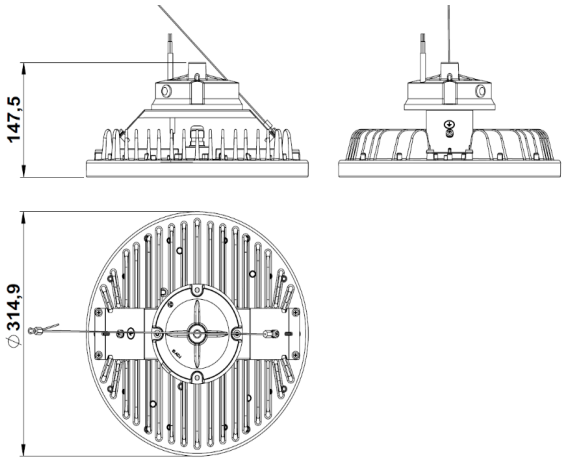

Dimensions (mm)

	a	b
Standard	314.9	147,5

Weight (kg)

Standard	3,5

Suspension Set

1

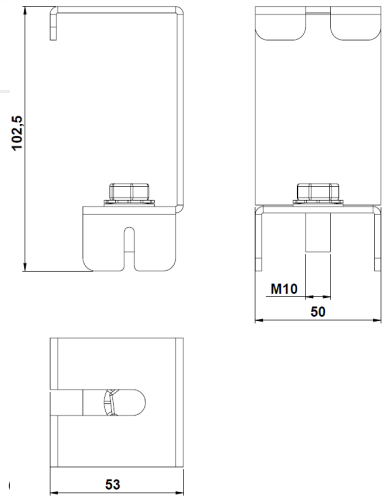

Order Code : 3269523

Product Code : HBL IP65 TRAY HANGER SET

2

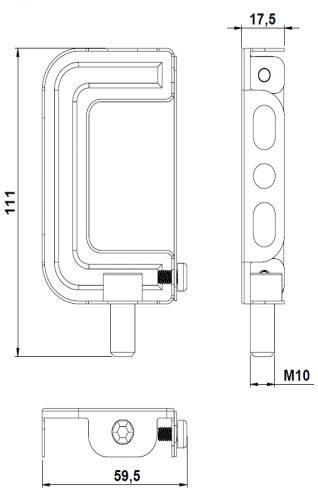

Order Code : 3269524

Product Code : HBL IP65 HANGER SET FOR BUSBAR SYSTEM

3

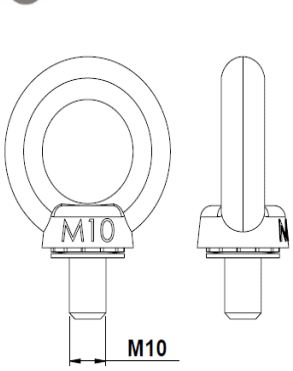

Pendant Single Hanger Set

Order Code : 3269522

Product Code : HBL IP65 PENDANT SINGLE HANGER KIT

- EAE, reserves the right to make changes without prior notice.

engineering the light

EAE Aydınlatma A.Ş.
İkitelli Organize Sanayi Bölgesi Eski Turgut Özal Caddesi No:20 Başakşehir / İSTANBUL-TURKEY **Phone:** +90 212 413 21 00 (pbx) **Fax:** +90 212 549 37 90
www.eaeaydinlatma.com.tr

Revision date: 19.09.2022